E-8144-LM60E-T

VIGNOLA Series

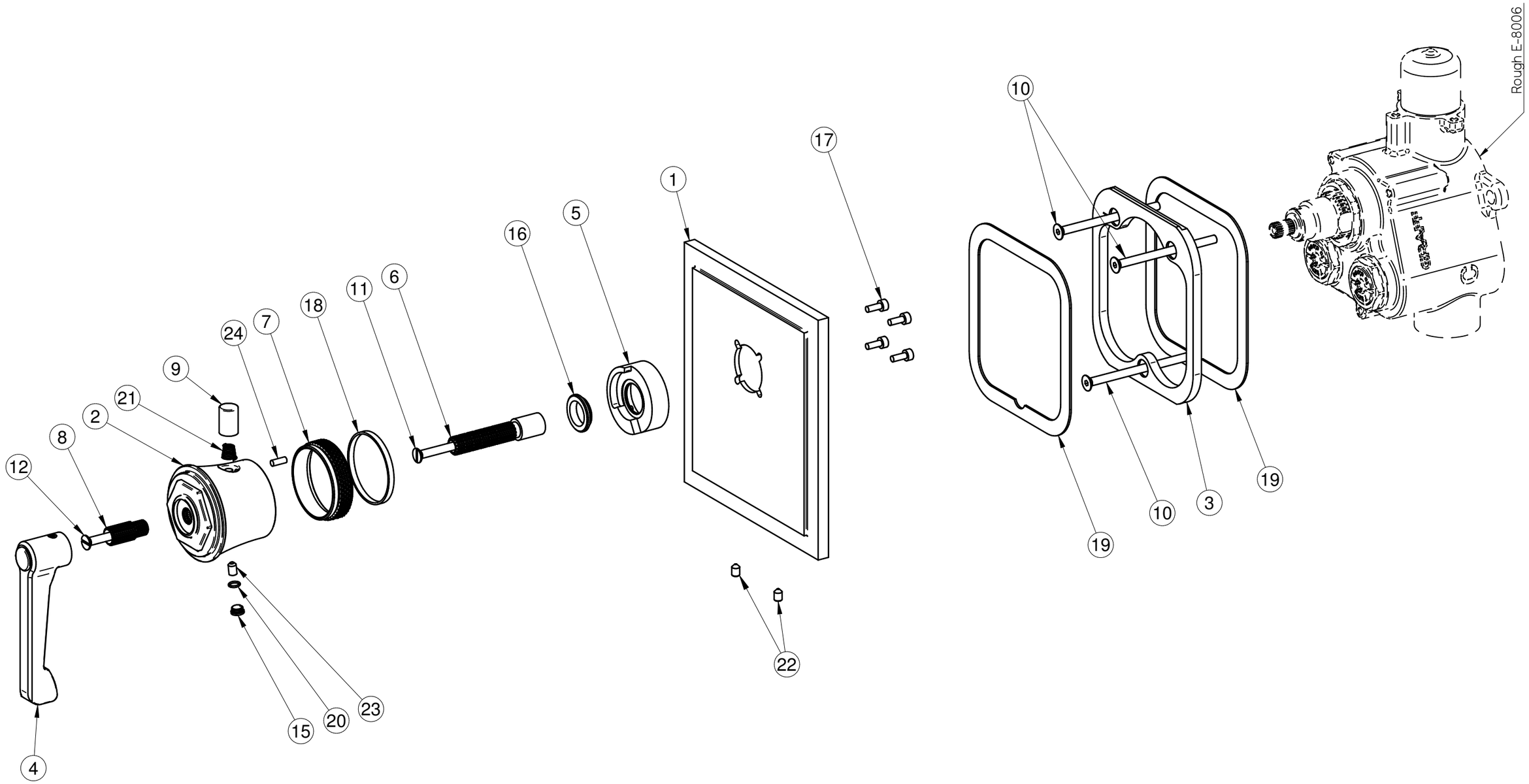

GRAFF®

CUTTING EDGE DESIGN